Parameters estimation in workers exposed to radioactive isotopes using multi-response models

J. G. Sánchez León,
J. M. Rodríguez-Díaz
Universidad de Salamanca.

The metabolism of the radioactive substance intake by people can be modelled using systems of linear differential equations. Bioassays (e. g. isotopic activity excreted via urine, activity retained in the whole body or in the lungs) are applied in order to get information about some parameters of the model. In some cases, it could be convenient to use different types of bioassays in the same person, which allows better estimations of the parameters that characterize the solution of the system of equations, and in fact, sometimes it is the only practical way to get information about some of them. The computation are made using BIOKMOD (**http://oed.usal.es/biokmod**)

When it is assumed, that not only the intake but also other parameters are unknown then the below eqns. for fitting the bioassay data are applied (It is minimized Chi2):

$$(\hat{I},\ k_1,\ \ldots,\ k_r)\ :\ \text{Arg}\ \underset{[I,k_1,\ldots,k_r]}{\text{Min}}\left[\sum_{i=1}^{N}\left(\frac{I\,r_{C,j}(t_i,\ k_1,\ \ldots,\ k_r)\ -\ m_i}{u_i}\right)^2\right]$$

$$\text{Restrictions}:\ I>0,\ k_{1\,(\min)}\le k_1\le k_{1\,(\max)},\ \ldots,\ k_{r(\min)}\le k_r\le k_{r(\max)}$$

$$(\hat{I},\ k_1,\ \ldots,\ k_r)\ :\ \text{Arg}\ \underset{[I,k_1,\ldots,k_r]}{\text{Min}}\left[\sum_{i=1}^{N}\left(\frac{\text{Log}[I\,r_{C,j}(t_i,\ k_1,\ \ldots,\ k_r)]\ -\ \text{Log}[m_i]}{\text{SG}_i}\right)^2\right]$$

$$\text{Restrictions}:\ I>0,\ k_{1\,(\min)}\le k_1\le k_{1\,(\max)},\ \ldots,\ k_{r(\min)}\le k_r\le k_{r(\max)}$$

The figure represents the iodine biokinetic model: compartment 1 (blood) and compartment 2) Samples for different times are taken in compart 1 and 2. Then, the rate transfer coeffs. k12 and k23 are estimated by fitting.

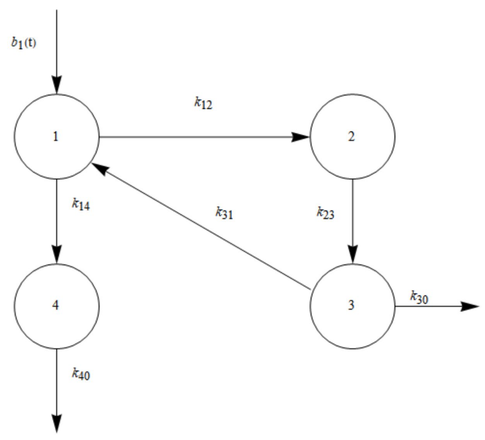

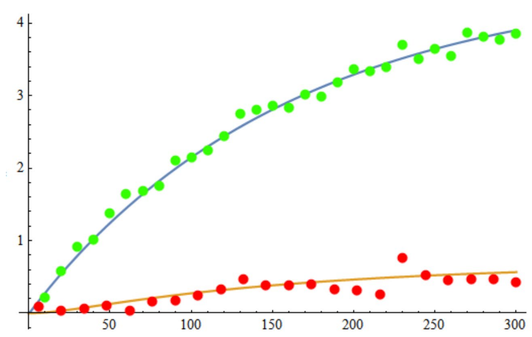

We have studied some practical cases of this kind using nonlinear regression based on real situations. The methodology requires solving the biokinetic models of the ICRP, recently updated (ICRP 130, 134 & 137), to obtain the retention and excretion functions: $r_c(t,k_1,\ \ldots,\ k_r)$.

HRTM (ICRP130) and Cobalt Model (ICRP 134), including the Human Alimentary Tract Model HATM (ICRP 100)

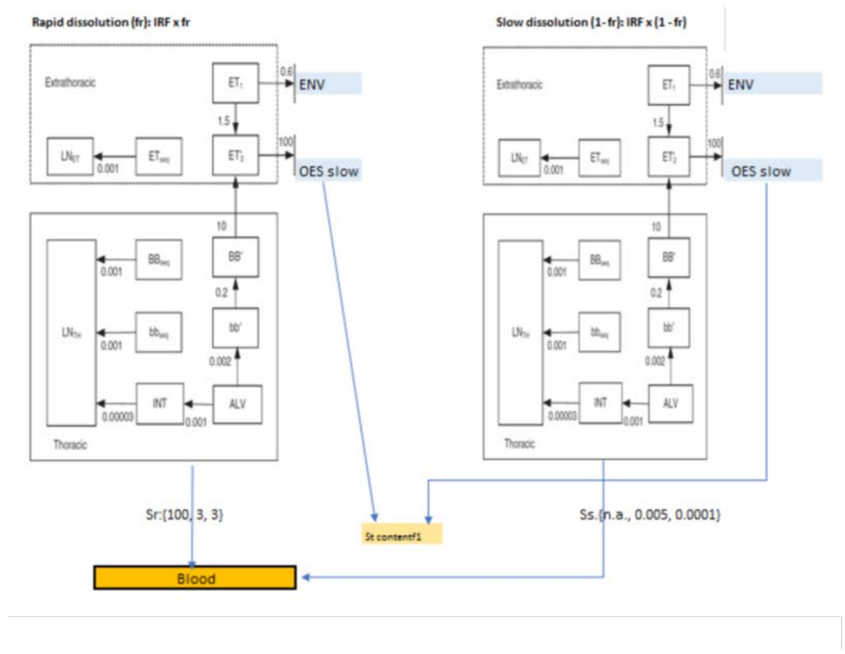

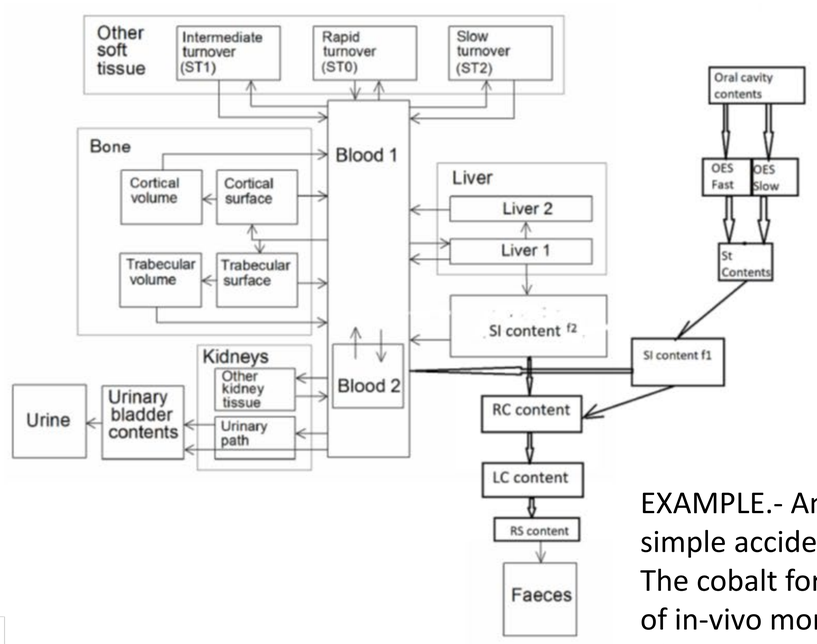

EXAMPLE.- An operator has been exposed to a simple accidental intake by inhalation of Co-60. The cobalt form was metal and oxide. A program of in-vivo monitoring was carried out ten days after the event and continued up to 3 years. Urine samples were also taken.

The most usual features of BIOKMOD are available at BIOKMODWEB . It runs online in your computer, tablet or mobile phone.

BiokmodWeb (Bioassay data evaluation)

To report bugs and comments send an e-mail to author

This function gives the estimated intake (assumed acute) using the bioassay data determinations. If you wish evaluate wound use Injection. More complex evaluation can be made using BIOKMOD including non linear fitting by Ji2 minimization

Look at the Help. Fill the biossay data {{t1, m1, s1},{t2, m2, s2}, ...} being ti the time after the intake where the measure mi, with standard deviation si, is taken. If one kind of bioassay they are not data write Not Applicable. Select first the element following with steps shown in the screen. For a new evaluation you must reselect all parameters. To define your own input for *Type* and *AMAD* just select the checkbox and introduce the input.

A detailed description of the methods applied can be found in: Fitting bioassay data and performing uncertainty analysis with BIOKMOD Health Physics.92(1)pg 64-72. 2007. ISSN/ISBN: 0017-9078

Lung counter in Bq (only for inhalation intakes):

```
{{2, 845, 5}, {7, 796, 5}, {18, 736, 5},
{50, 586, 5}, {90, 510, 5}, {120, 475, 5}, {180, 427, 5}, {300, 381, 5},
```

Urine excretion in Bq/day:

```
{{2, 0.63, 0.02}, {14, 0.18, 0.02}, {24, 0.14, 0.02},
{80,0.06, 0.02}, {130, 0.07, 0.02}, {320, 0.03, 0.02}, {560, 0.03, 0.02}}
```

Fecal excretion in Bq/day:

```
{{1, 1537, 2}, {5, 189, 2}, {9, 11, 2}, {14, 7, 2},
{30,5, 1.2}, {60, 3, 1.1}, {120, 1, 0.7}}
```

Whole body measures in Bq :

```
Not Applicable
```

Select ELEMENT: U ▼ λ (in days^-1): 0

Select Intake Way : ◉ Inhalation ○ Ingestion ○ Injection

Select AMAD(only for inhalation) : 5 ▼ (By default) Or {AI, bbfastseq, bbslow, BBfastseq, BBslow, ET2, ET1}

Select Type: S ▼ (By default) Or {sp, spt, st} f1: 0.002 Method: Automatic ▼

Biokmod Help

Evaluate

results

```
{Mean -> 13490.5, s -> 15.7241, Ji2 -> 20.9858}
```

Time of measurement after intake (in days), Whole Body Activity (WBA) of Co-60 (Bq) and Urinary Excretion Rate (24h) (DUER) of ^{60}Co (Bq)

i	Time (t_i)	WBA (y_{1i})	DUER (y_{2i})
1	10	23900	
2	14	29200	709
3	17	20100	
4	20	18200	
5	27	21600	64
6	40	19800	71
7	60	21600	37
8	80	17500	29
9	190	11600	11
10	370	8100	1.7
11	747	4800	
12	1010	2700